SIGMA
PRECISION CRAFTED

# PARTS LIST

## 1.005496.V1

1/2” Thermostatic Set with
1 Volume Control with
Regent X Cross Handle

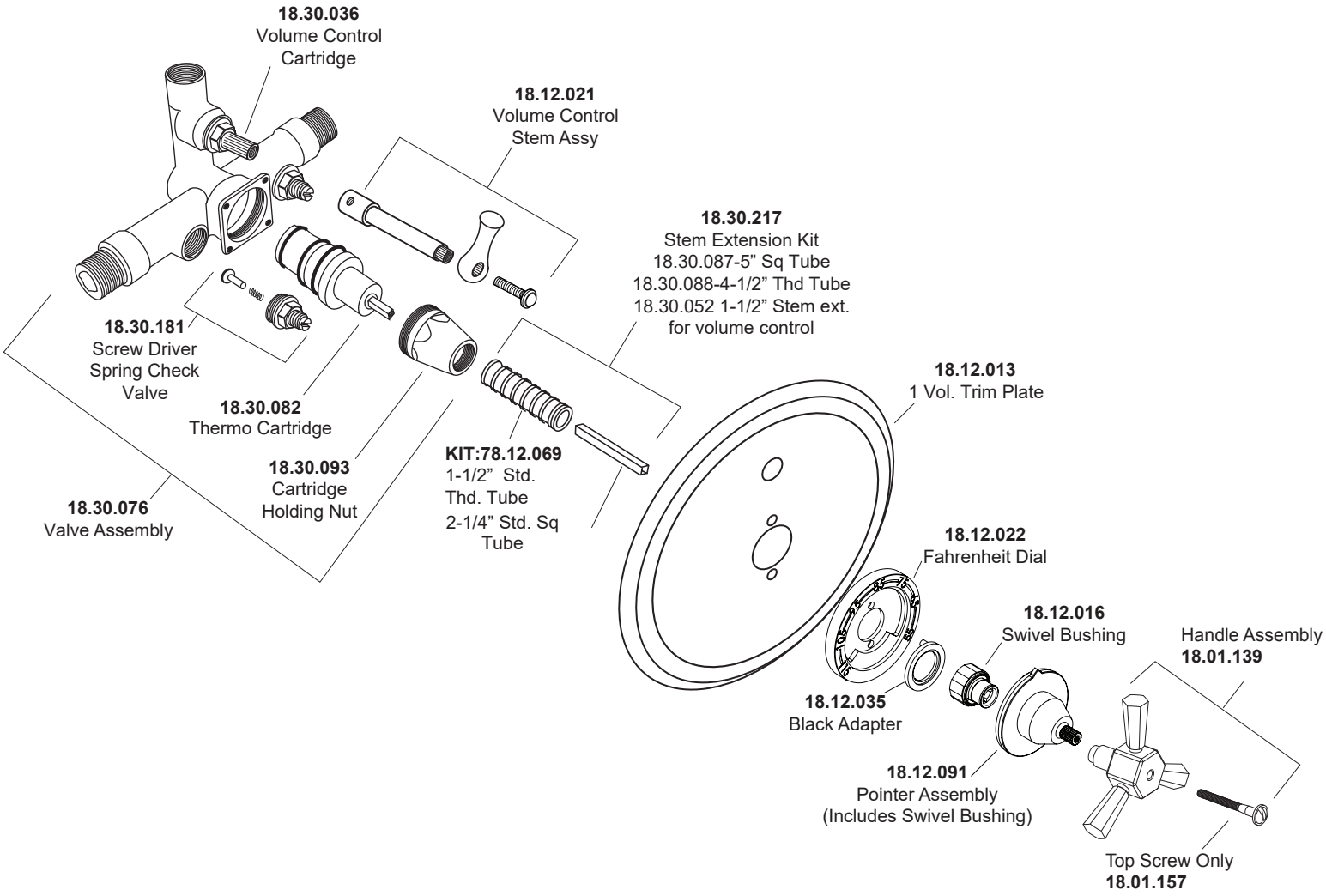




Tel: 760-598-5895, Toll Free Fax 800-621-8383, customerservice@sigmafaucet.com