SIGMA
PRECISION CRAFTED

PARTS LIST

1.006296.V1

1/2” Thermostatic Set with
1 Volume Control with
Tremont X Cross Handle

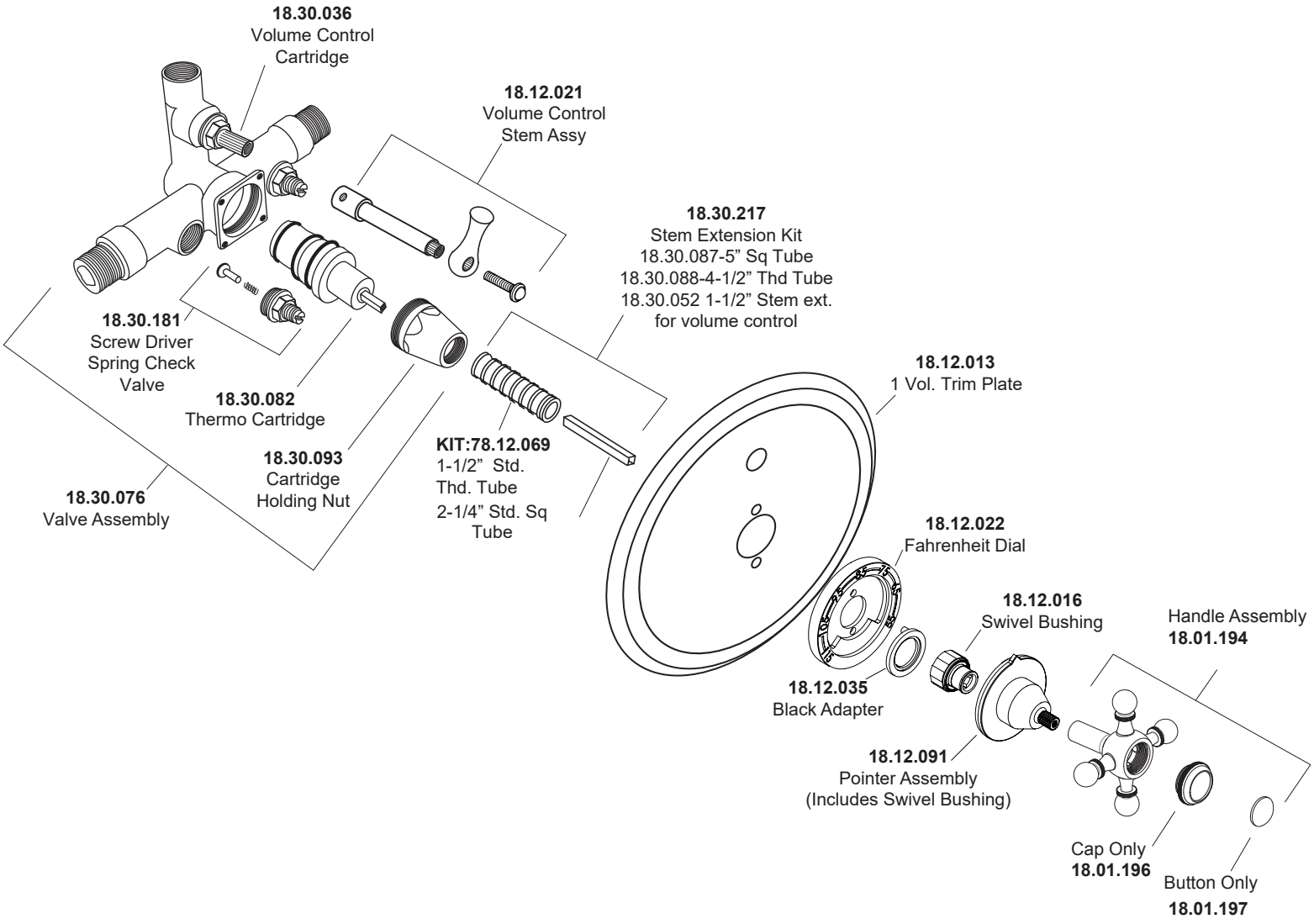

Tel: 760-598-5895, Toll Free Fax 800-621-8383, customerservice@sigmafaucet.com