SIGMA
PRECISION CRAFTED

PARTS LIST

1.079896.V2
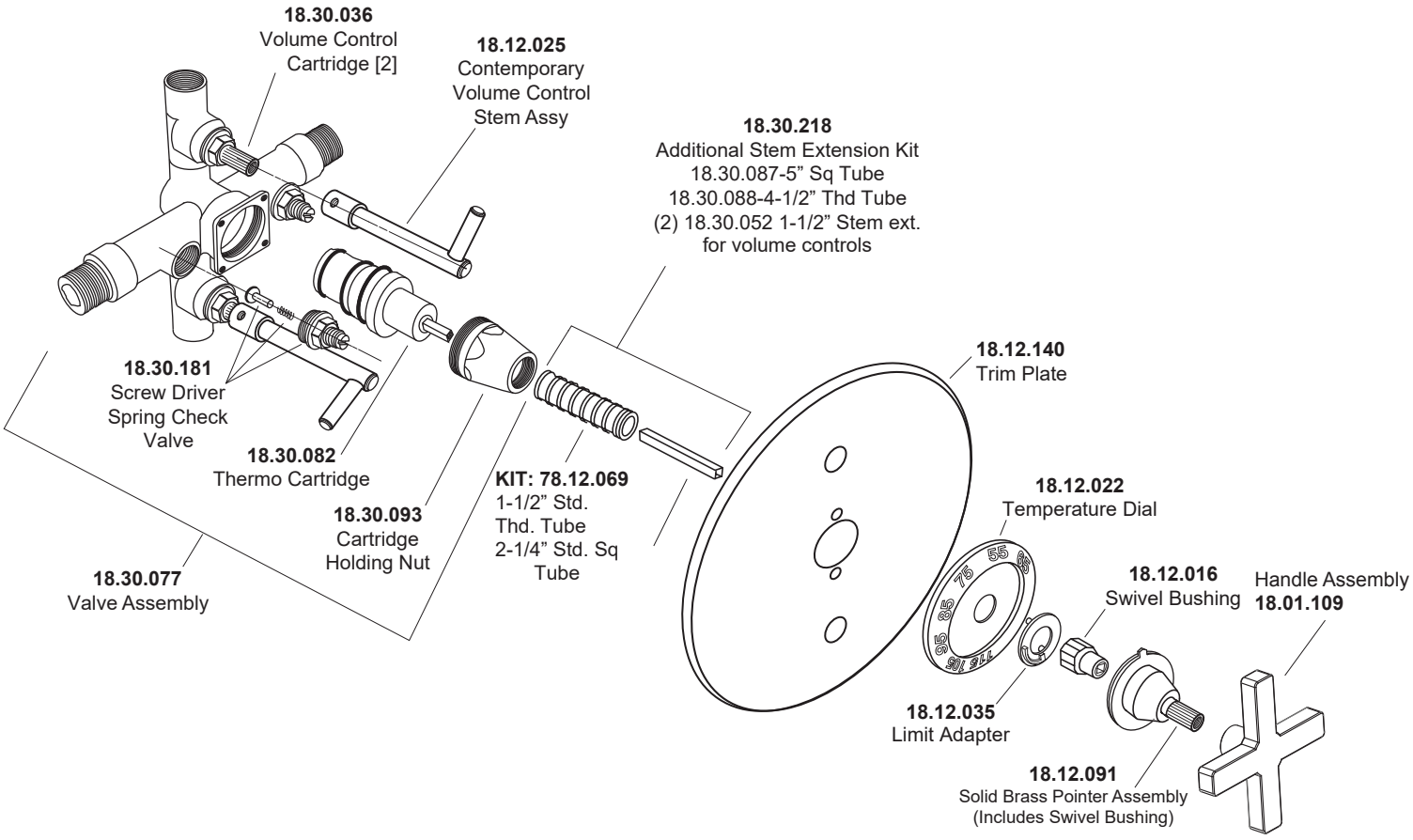
1/2” Thermostatic Shower Set with Two Volume Controls and Capella X Cross Handle