SIGMA
PRECISION CRAFTED

Specifications

FEATURES:

- All brass construction.
- Available in all Sigma finishes. Warranty varies according to finish selection.
- Mounting bracket and screws are supplied.

Accessories

Series 60
Paper Holder
1.60PH00

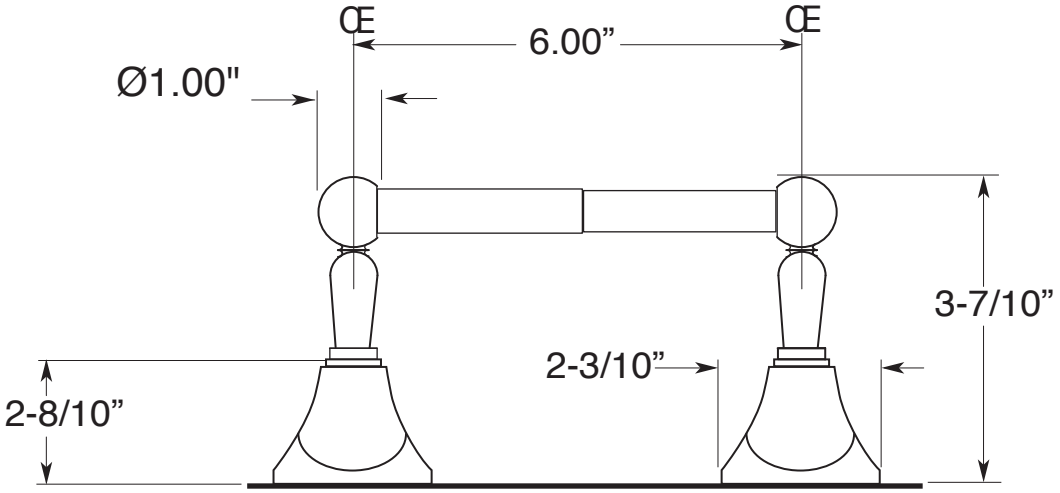

Note: Measurements are subject to change or cancellation. No responsibility is assumed for use of superseded or voided pages.