SIGMA
PRECISION CRAFTED

PARTS LIST

120 Series Wall/Vessel Lavatory Set with Shorter Spout and Capella Handle

1.129707S

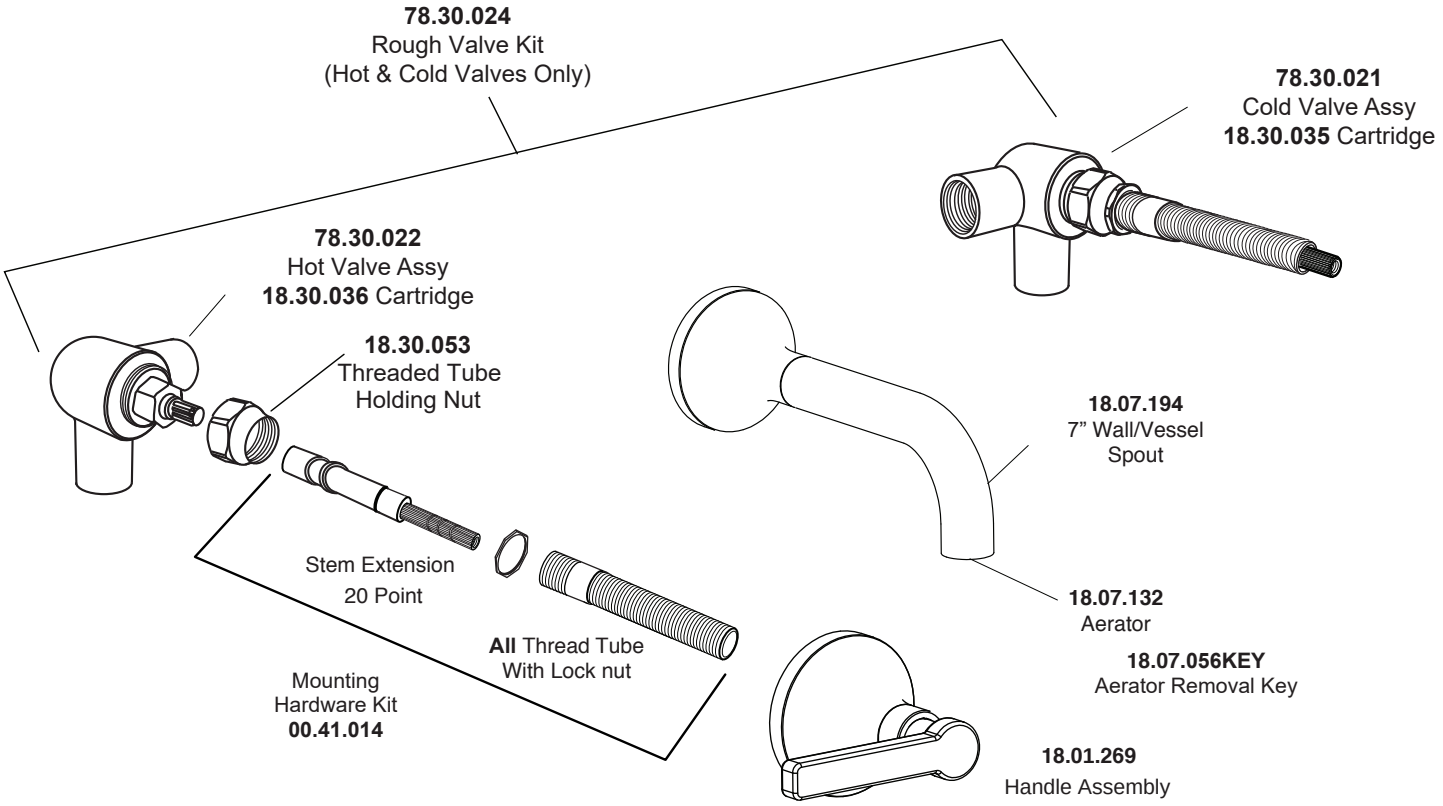

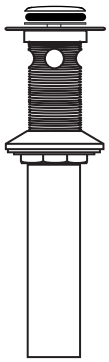

Soft Touch
Drain
Assembly
18.11.052

American Faucet & Coatings Corporation.

Tel: 760-598-5895, Toll Free Fax 800-621-8383, customerservice@sigmafaucet.com