SIGMA
PRECISION CRAFTED

PARTS LIST

110 Series Wall/Vessel Lavatory Set with Shorter Spout and Stella X Handle

1.110807S

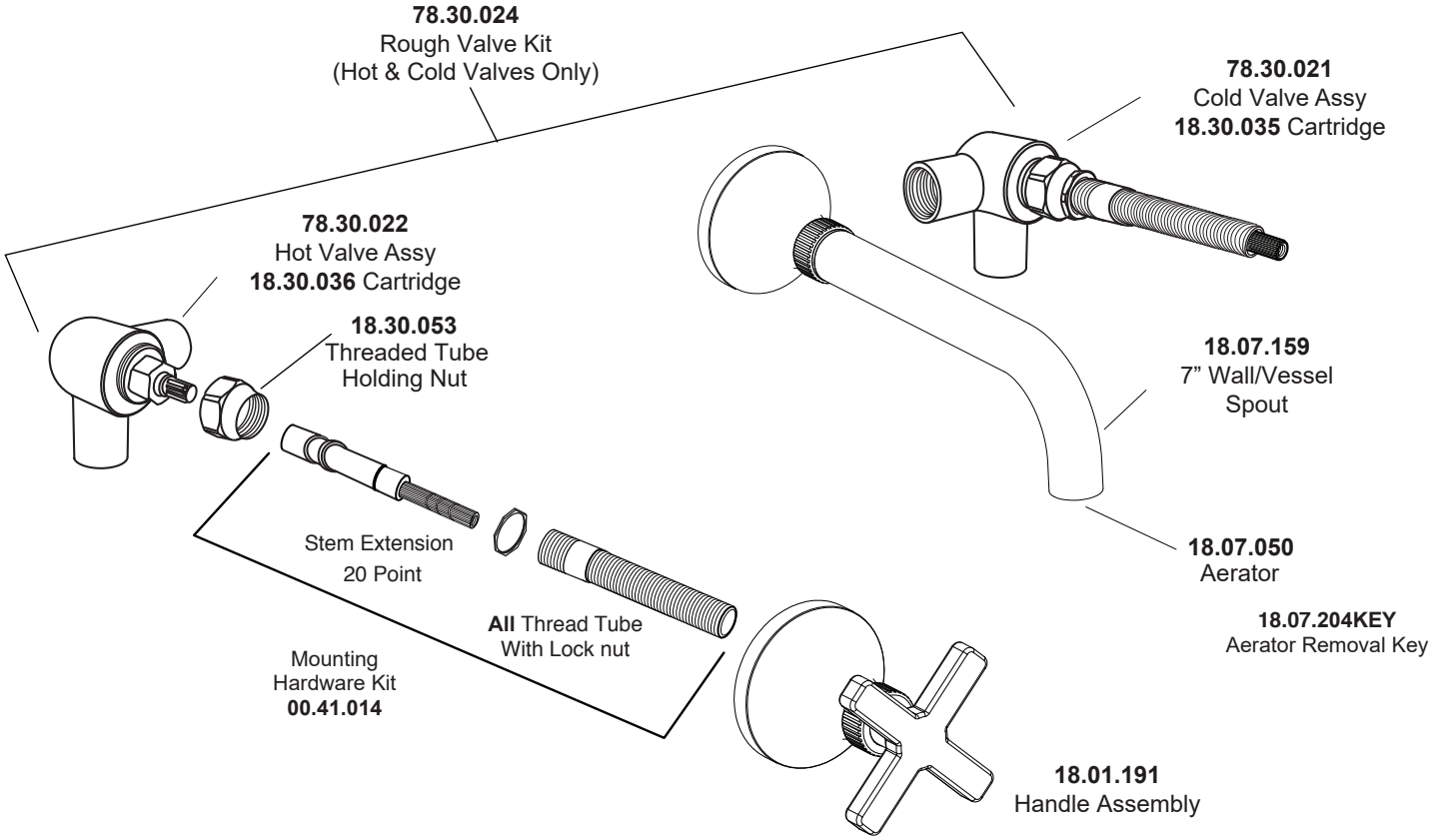

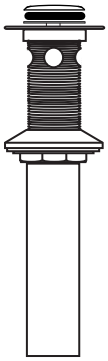

Soft Touch
Drain
Assembly
18.11.052

American Faucet & Coatings Corporation.

Tel: 760-598-5895, Toll Free Fax 800-621-8383, customerservice@sigmafaucet.com