SIGMA
PRECISION CRAFTED

PARTS LIST

3400 Series Lavatory Set with Carina Handles

1.342808

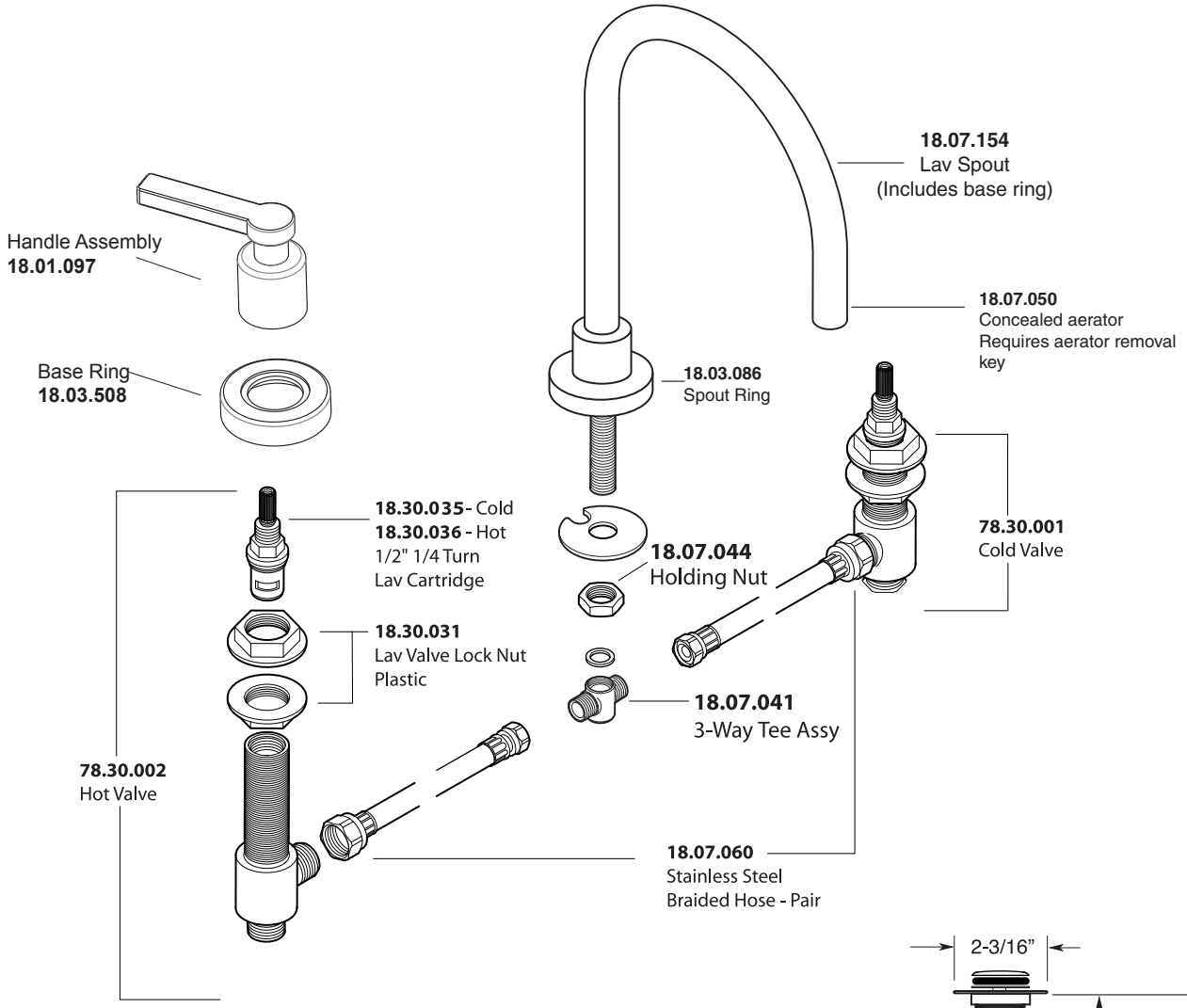

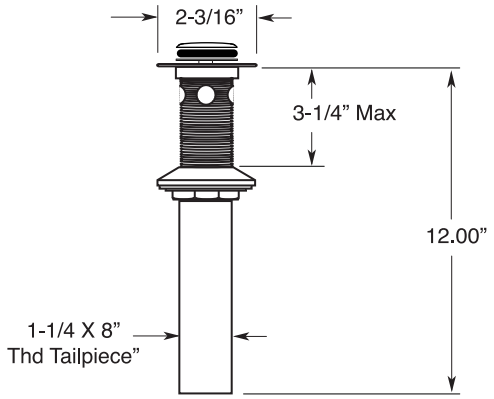

SOFT TOUCH
DRAIN ASSEMBLY
P/N 18.11.052