SIGMA
PRECISION CRAFTED

PARTS LIST

2500 Series Widespread Lavatory Set with Regent X Handles

1.255408

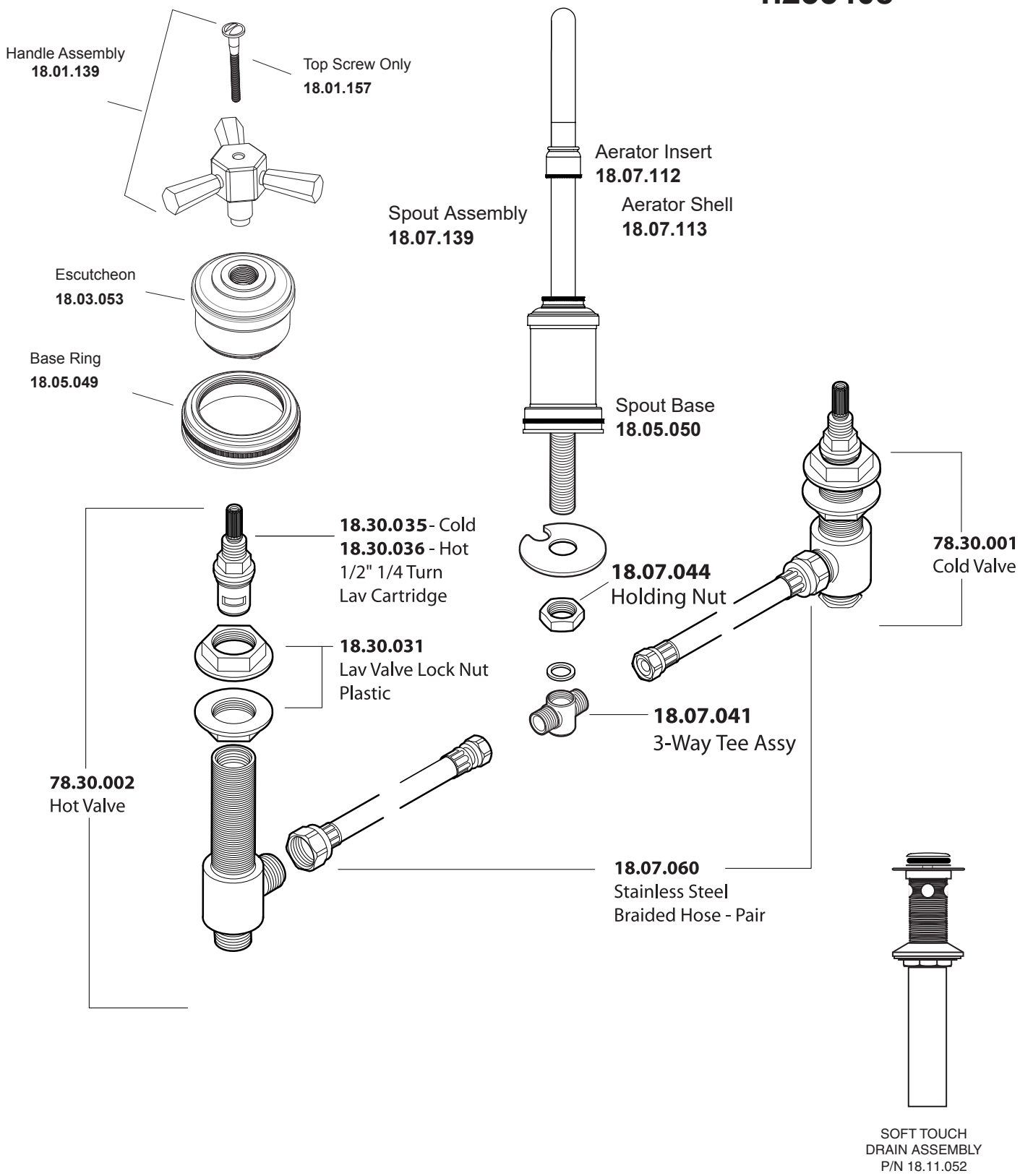

American Faucet & Coatings Corporation.

Tel: 760-598-5895, Toll Free Fax 800-621-8383, customerservice@sigmafaucet.com