RESERVE Collection

# Parts List

# Rutherford

## Imperial 1/2” Thermostatic with One Volume Control

7.0248296V

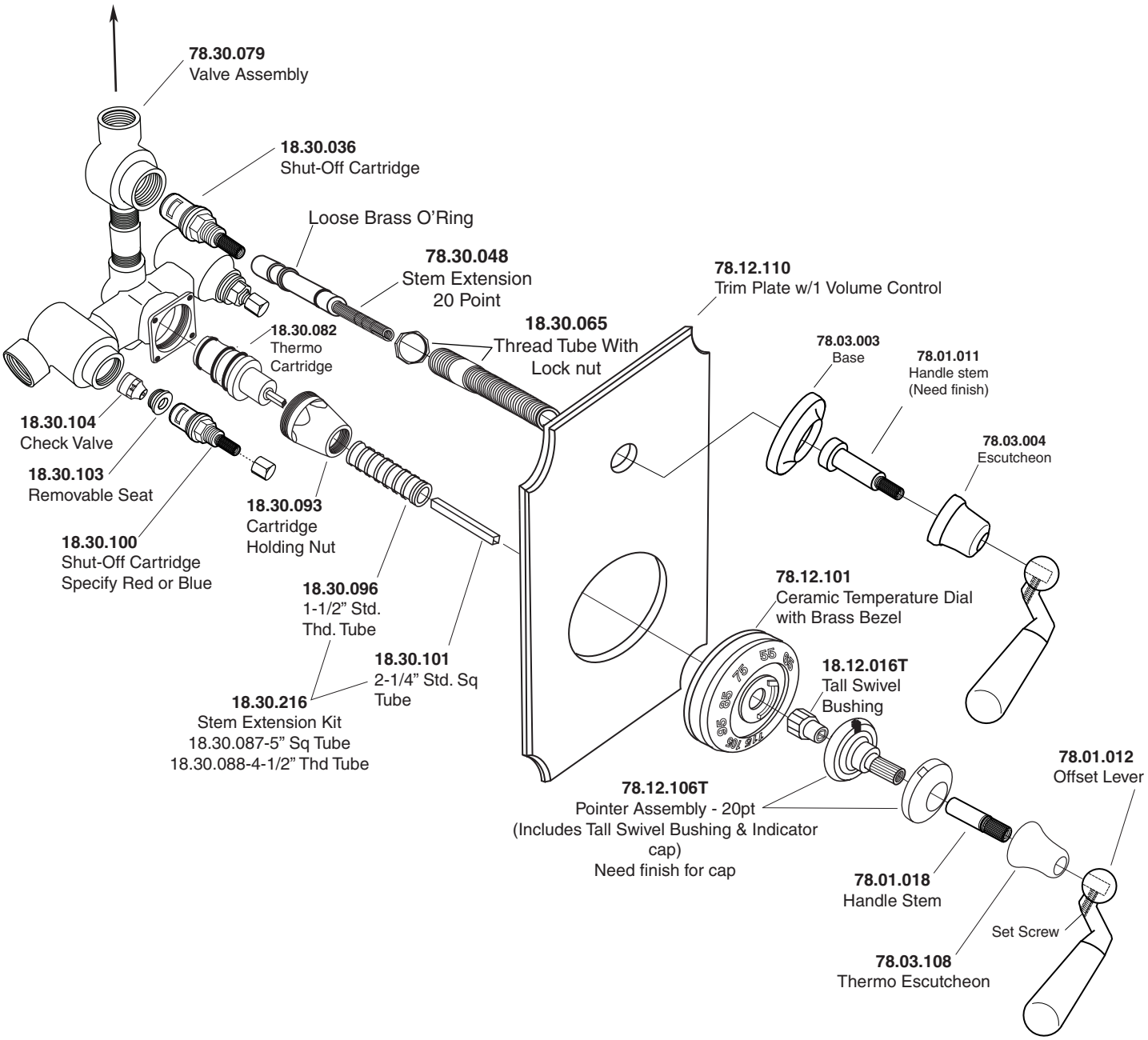


American Faucet & Coatings Corporation.

Tel: 760-598-5895, Toll Free Fax 800-621-8383, customerservice@sigmafaucet.com