RESERVE Collection

Parts List

Rutherford

Imperial 1/2" Thermostatic with One Volume Control

7.0248696V

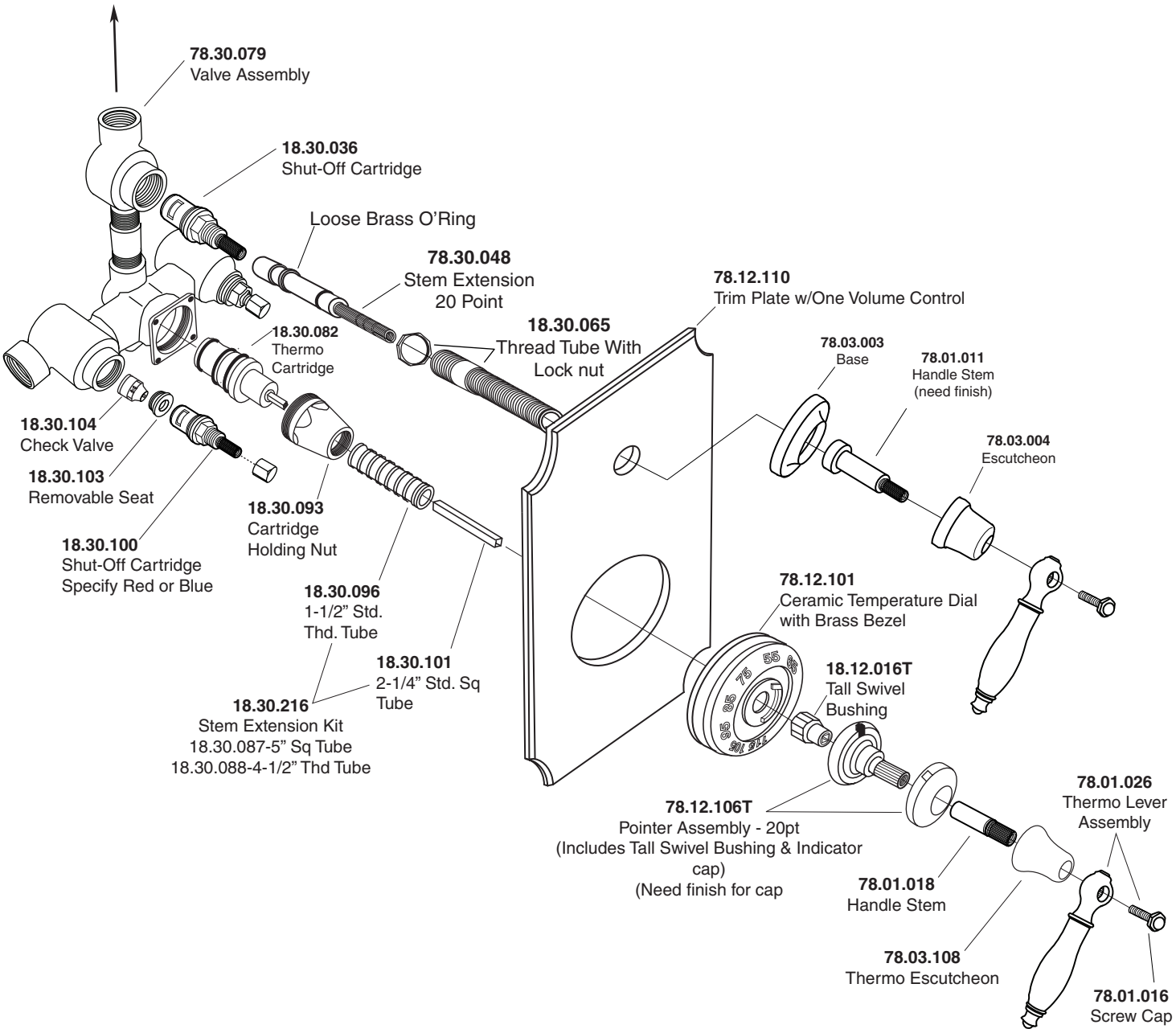

American Faucet & Coatings Corporation.

Tel: 760-598-5895, Toll Free Fax 800-621-8383, customerservice@sigmafaucet.com