SIGMA
PRECISION CRAFTED

PARTS LIST

E-Mini Thermostatic Trim W/ Rectangular Plate and Stella Handle
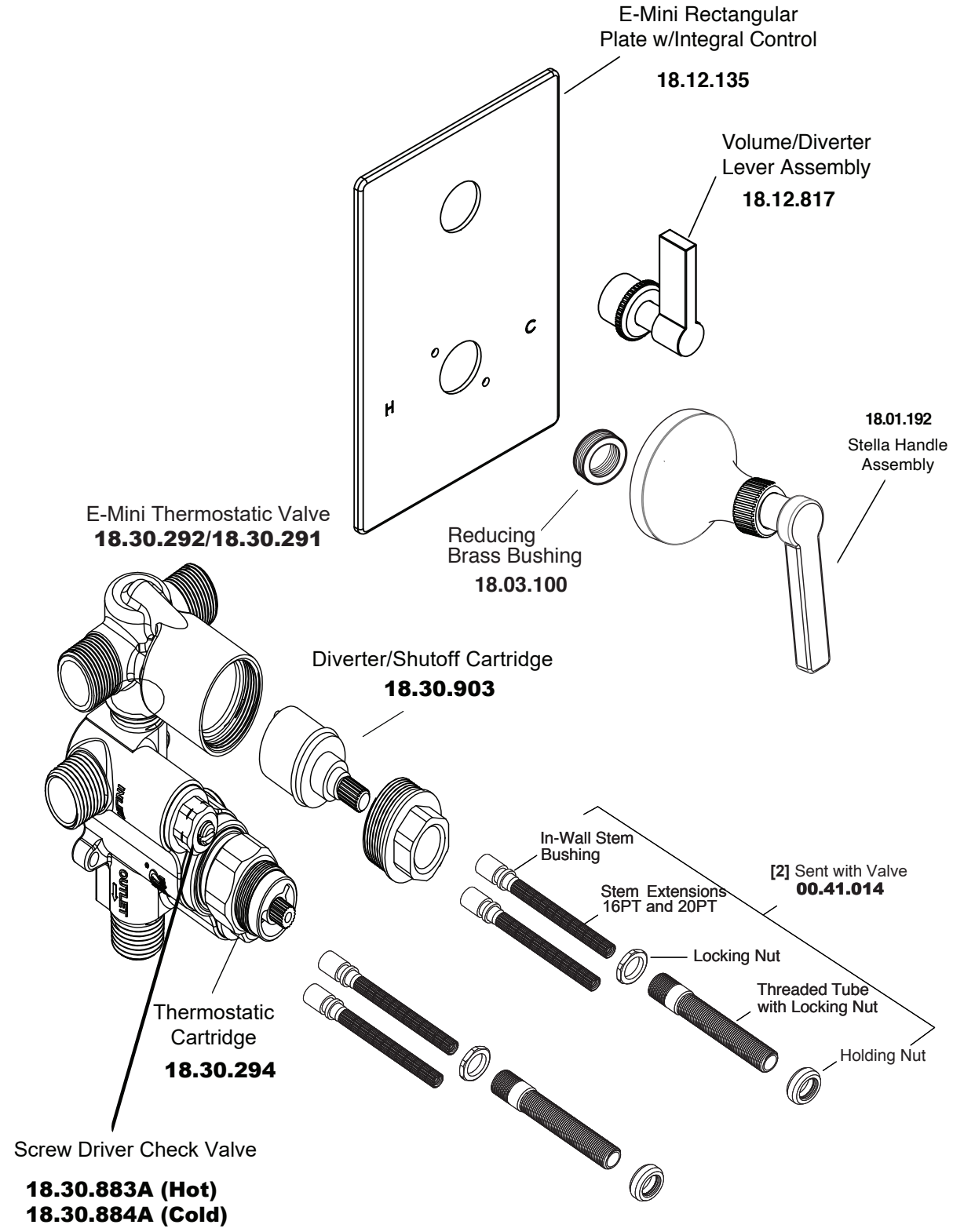
1.0S0751T