SIGMA
Designer Faucetry

# TechData

## Specifications

# APS

American Plumbing Specialties

5” Square Cast Iron Floor Drain
with Solid Nickel Bronze Top
APS.11.509

APS.11.509T (Trim Only)

FEATURES:

- Cast Iron construction.
- 5” x 5” Square adjustable Solid Nickel Bronze Strainer assembly.
- Reversible clamping collar.
- Available in most finishes

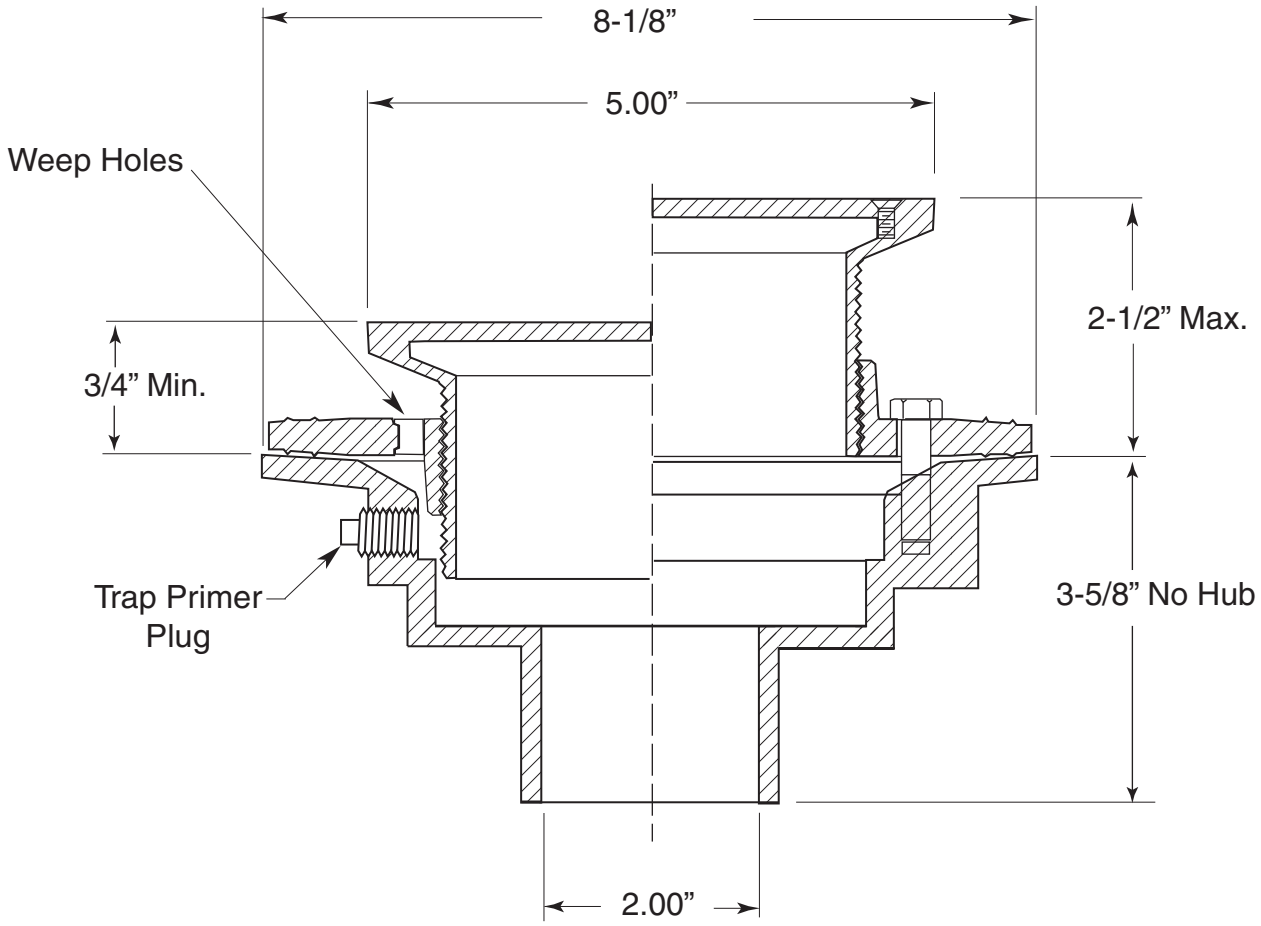


Note: Measurements are subject to change or cancellation. No responsibility is assumed for use of superseded or voided pages.