SIGMA Designer Faucetry

TechData

SPECIFICATIONS

Waldorf

E-Mini Therm Valve
Remote Thermostatic Valve
w/Volume Control
18.30.291

Features:

- Forged Brass Construction
- Adjustable Hot Limit Safety Stop with Push-In Override
- Thermostatic valve cartridge: 18.30.294
- Cartridge: 18.30.903

- NOTE: Leave cap on the out-port to modify to 18.30.291

Rough-In Leftside Cutaway View

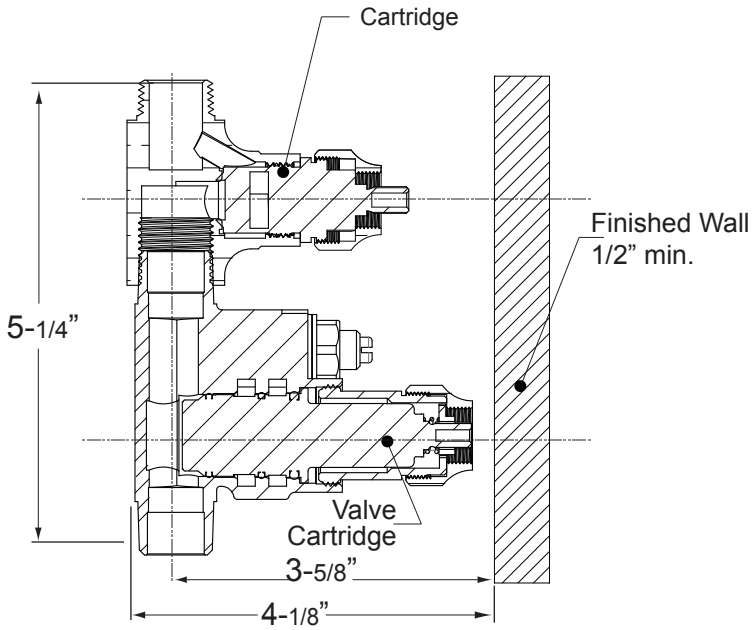

*NOTE: Stem and All-Thread Tube will be sent with Handle Trim.

Rectangle Faceplate Leftside View

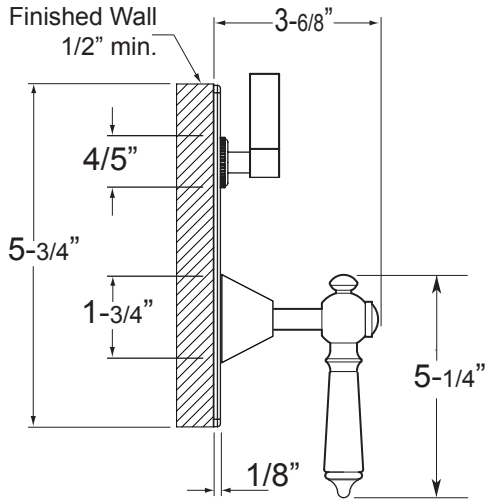

1.0S7651T
5-3/4" x 3-3/4"

NOTE: MUST purchase Showerhead, Arm, Flange, and other options separately.

*NOTE: Stem and All-Thread Tube will be sent with Handle Trim.

Rough-In Top View

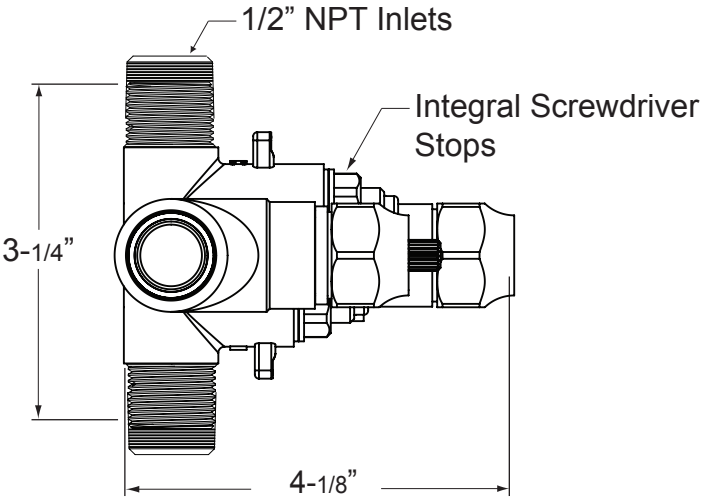

REF. ONLY

Round Faceplate Leftside View

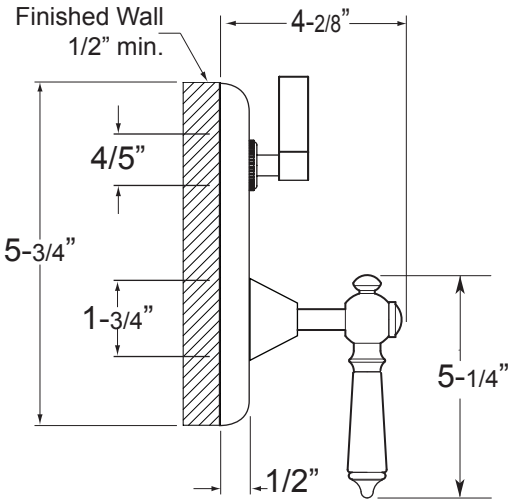

1.0R7651T
5-3/4" round

NOTE: Measurements are subject to change or cancellation. No responsibility is assumed for use of superseded or voided pages.

SIGMA Designer Faucetry

TechData

SPECIFICATIONS

Waldorf

E-Mini Therm Valve
Remote Thermostatic Valve
with Two-Way Diverter
18.30.292

Features:

- Forged Brass Construction
- Adjustable Hot Limit Safety Stop with Push-In Override
- Flow capacity / Diverter - 4.5 GPM / 45 psi
- E-mini thermostatic cartridge 18.30.294
- Diverter cartridge 18.30.903

Rough-In Leftside Cutaway View

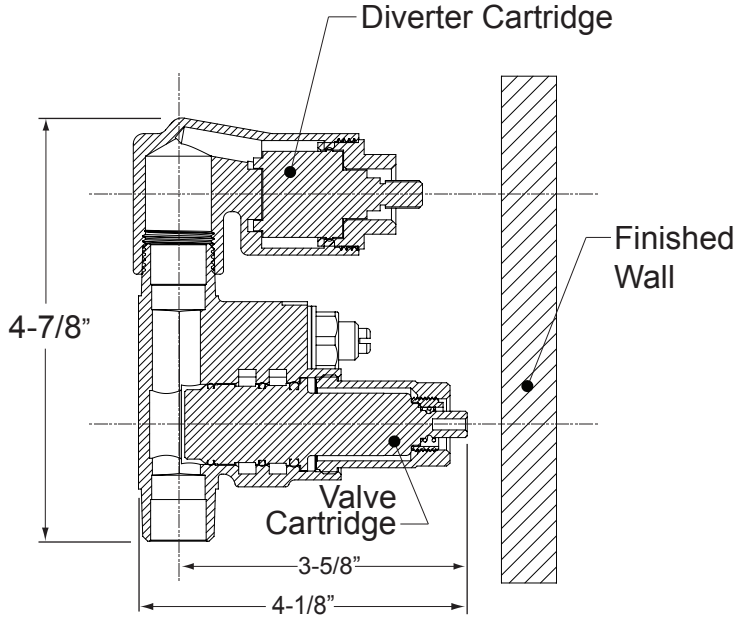

*NOTE: Stem and All-Thread Tube will be sent with Handle Trim.

Rectangle Faceplate Leftside View

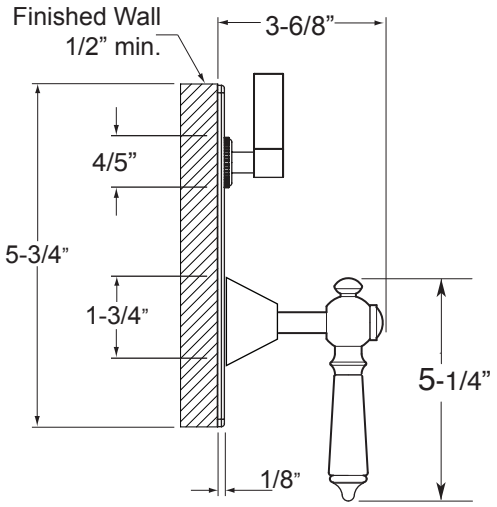

1.0S3751T
5-3/4” x 3-3/4”

NOTE: MUST purchase Showerhead, Arm, Flange, and other options separately.

*NOTE: Stem and All-Thread Tube will be sent with Handle Trim.

Rough-In Top View

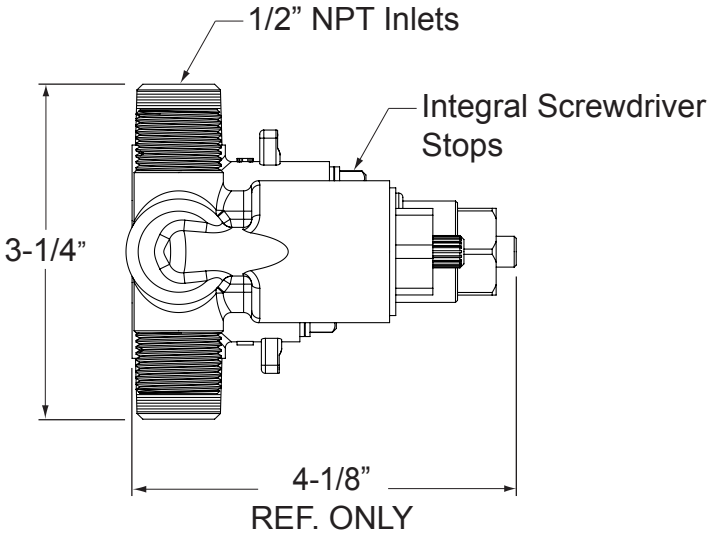

Round Faceplate Leftside View

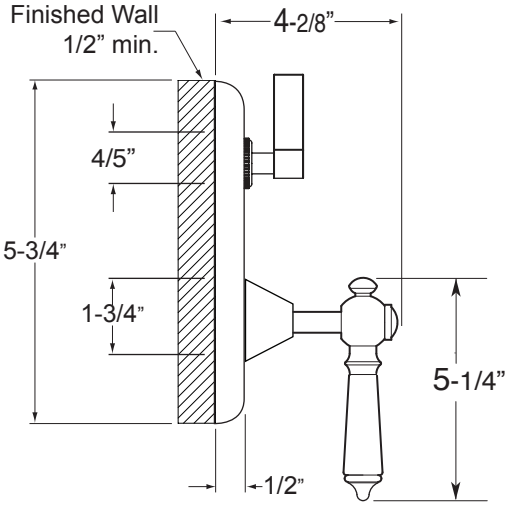

1.0R3751T
5-3/4” round

NOTE: Measurements are subject to change or cancellation. No responsibility is assumed for use of superseded or voided pages.