SIGMA
PRECISION CRAFTED

SPECIFICATIONS

Series 510
Pressure Balance Shower Set

1.008364
(1.008364T - Trim Only)

Lisse Handle

Euro Style 20 pt.

FEATURES:
- Forged brass construction
- Valve cartridge 18.30.893
- Adjustable hot limit safety stop
- Reversible cartridge
- 5.6 GPM @ 45 PSI
- Includes 1.8 GPM showerhead (18.10.051), arm, and flange

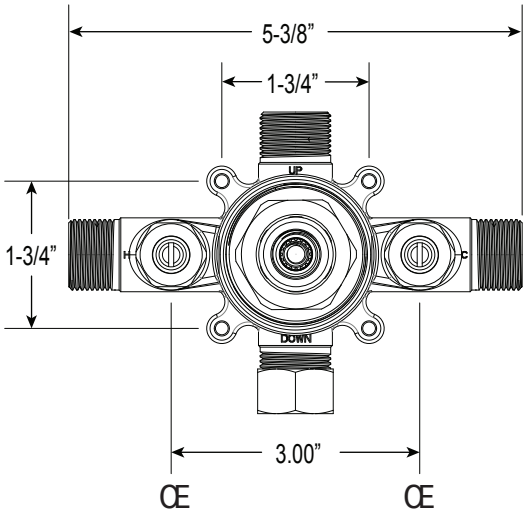

FRONT VIEW

**Note: Stem and all-thread tube will be sent with handle trim.*

SIDE VIEW

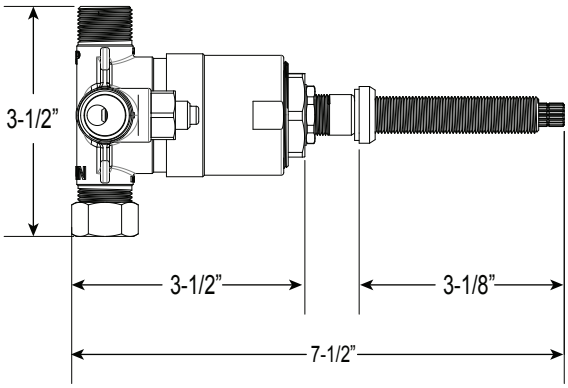

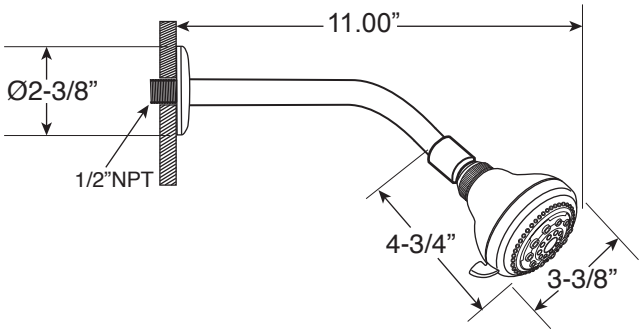

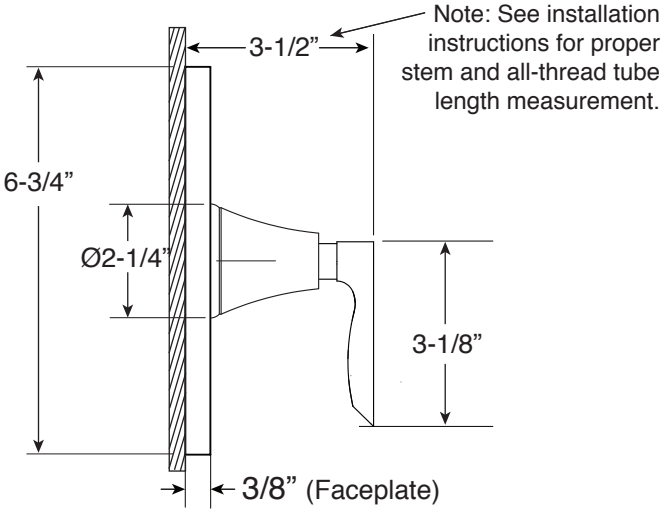

* Current valve in use: Circa 4/2014 - present Contact Customer Service for Older Versions	** For additional information on cartridges or extension kits, see ‘Rough Valving’ section in current catalog.

Note: Measurements are subject to change. No responsibility is assumed for use of superseded or voided pages.